FEOC

PUMPS

ANSI/ASME 1L SELFPRIMING PROCESS PUMP

SUPPLEMENT DRAWINGS ATTACHED WHEN LISTED BELOW	AVAILABLE FLANGES (ANSI B16.5)	OPTIONAL TAP CONNECTIONS
_____	CLASS 150 FF ☐ CLASS 150 RF ☐	
_____	CLASS 300 FF ☐ CLASS 300 RF ☐	
_____	SPECIAL _____ ☐	
_____	BASEPLATE	
	STEEL _____ ☐	
	SPECIAL _____ ☐	

TAP	REQ. SIZE	
I		CASING DRAIN
II		SUCTION NOZZLE CONN.
III		DISCHARGE NOZZLE CONN.
IV		AUXILIARY CONN.
V		STUFFING BOX
VI		BACK DRILLED SEAL FLUSH CONN.
VII		BOTTOM TAP IN STUFFING BOX

PUMP SIZE INLET X OUTLET - MAX. IMP. DIA.	PUMP WT LBS (KG)	CP	D	D5	D6	F	H	□	U SHAFT	U KEYWAY	X
1L 1 1/2X1 1/2AU-82	154 (70)	20 1/2 (521)	7 (178)	5 1/2 (140)	5 1/2 (140)	7 (178)	4 (102)	14 7/8 (378)	7/8 (22)	3/16 × 3/32 (4.8 × 2.4)	3 7/8 (96)

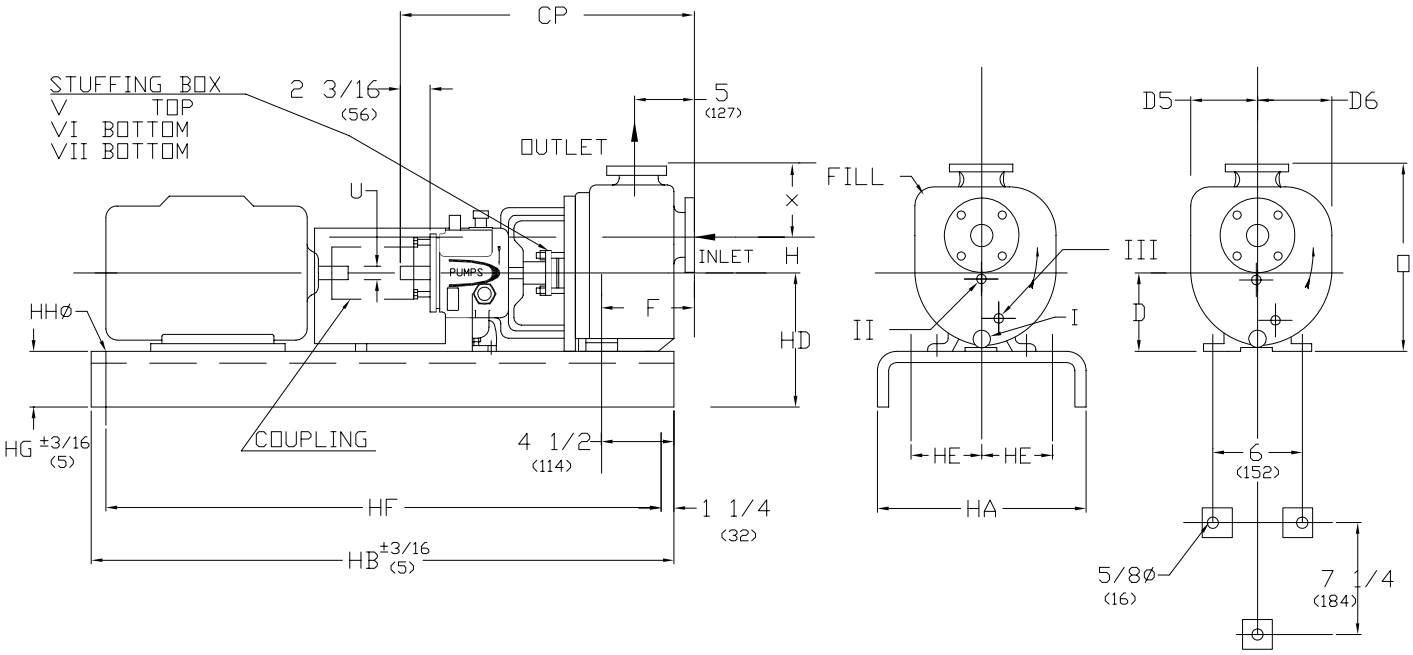

BARE PUMP MOUNTING DIMENSIONS

BASEPLATE AND MOUNTING DIMENSIONS

	BASE	MAX MOTOR FRAME	HA	HB	HD	HE	HF	HG (NOTA 3)	HHØ	WEIGHT lbs (kg)
	139	184T	15 (381)	39 (991)	10 3/4 (273)	4 1/2 (114)	36 1/2 (927)	3 3/4 (95)	3/4 (19)	111 (50)
	148	256T	18 (457)	48 (1219)	11 1/8 (283)	6 (152)	45 1/2 (1156)	4 1/8 (105)	3/4 (19)	163 (74)
	153	286T	21 (533)	53 (1346)	11 7/8 (302)	7 1/2 (191)	50 1/2 (1283)	4 3/4 (121)	3/4 (19)	212 (96)
		326TS			12 7/8 (327)					

1. DIMENSIONS IN PARENTHESIS () ARE IN MILLIMETERS
2. INSTALLATION DIMENSIONS ARE +- 1/8" (3) UNLESS OTHERWISE NOTED.
3. "HG" DIM. APPLIES TO THE LOWER PAD HEIGHT, WITH SOME BASES THIS WILL OCCUR AT PUMP END AND OTHERS AT MOTOR END.

CUSTOMER		CUSTOMER P.O.	CUSTOMER ITEM No.
FEOC ORDER No.	SERIAL No.	CERTIFIED BY:	DATE